ATTENTION:

- Files to be supplied as vector PDF , AI , EPS .
- Files can be supplied at 100%, 50% or 25% the correct proportions are important.
- Please ensure all logos and text are within the safe guide to prevent any cropping.
- All text needs to be converted to paths/outlines.
- Logos should be imported/placed as vector and must be in CMYK / pantone.
- Photographic images should be supplied at 100dpi at finished size.
- No bleed required.
- We can match PANTONE C colours but NOT PANTONE U.

6ft Fitted Open Back

Please convert text to outlines

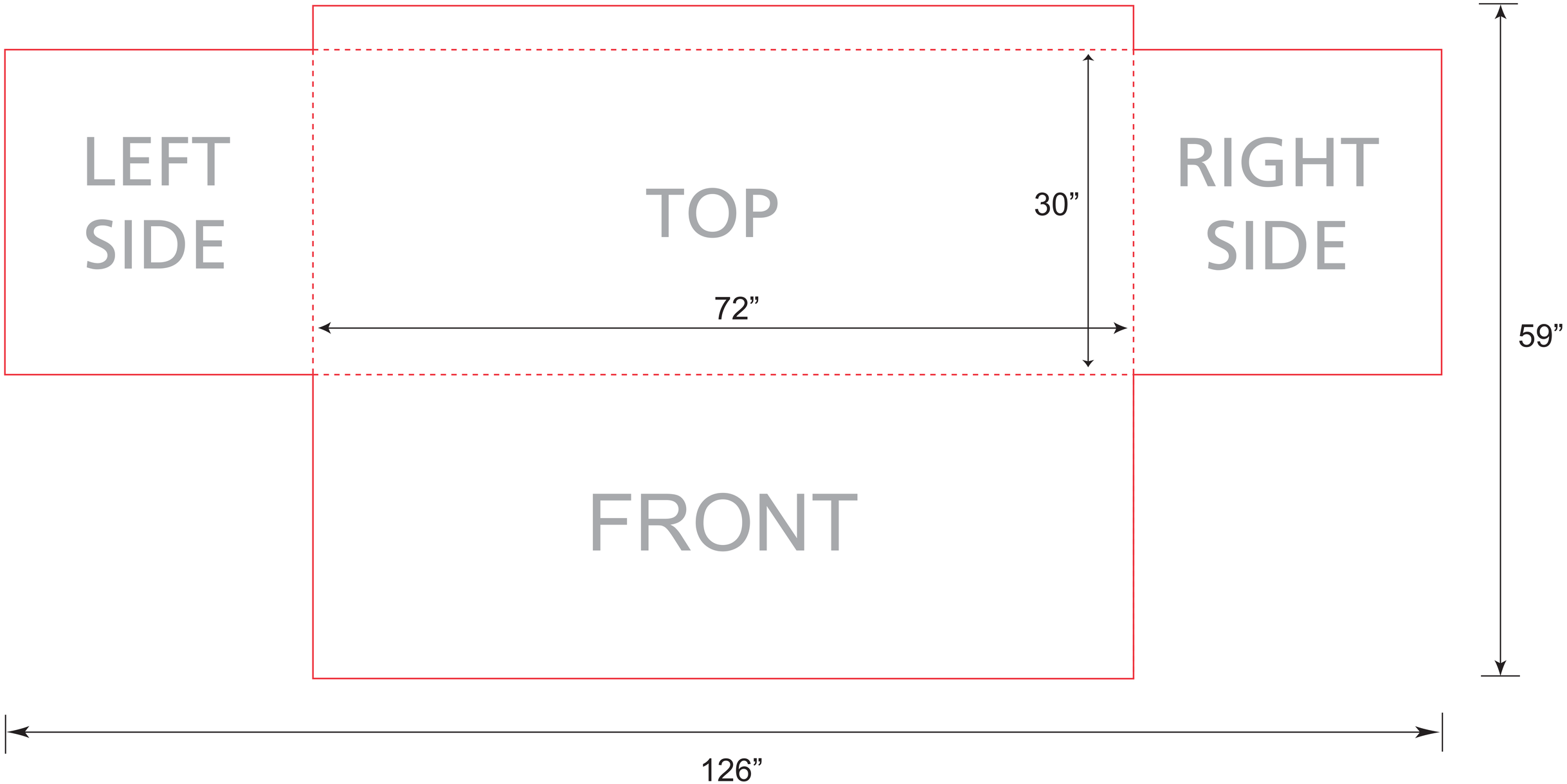

Due to the nature of the fabric and weather conditions, we cannot guarantee or predict how long the fabric and color will last in an ourdoor environment